COWRIE CHAIR

MADE IN RATIO







COWRIE CHAIR

MADE IN RATIO

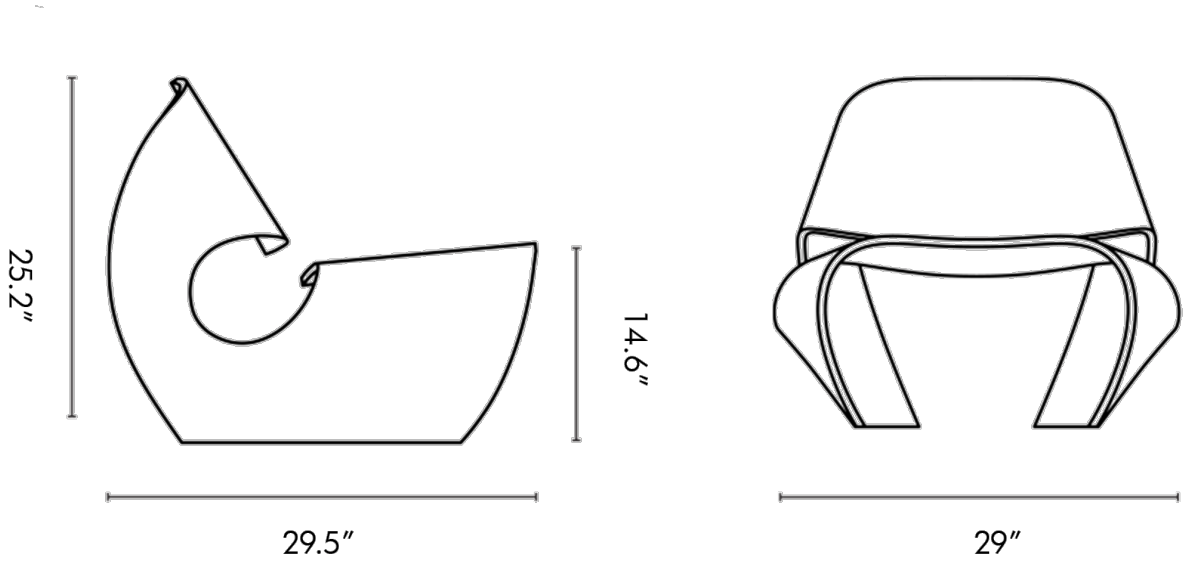

MANUFACTURER
Made in Ratio

ORIGIN
United Kingdom

PRODUCTION
Made to Order

DATE
2013

MATERIALS
Ash, Ebonized Ash, or Walnut.

DIMENSIONS
L 29.5" x W 29.1" x H 25.1"
Seat Height: 14.9"